3KV - REINFORCED TRANSFORMERS FOR CONEXANT'S SMARTDAA™

❶ SMARTDAA is a Trade mark of Conexant Systems
❷ Reinforced Insulation Per UL1950/CSA950/IEC60950
❹ Matched to Conexants Chips
❺ 3750Vrms Minimum Isolation Voltage

EXTENDED TEMP RANGE | **SINGLE CORE**

ELECTRICAL SPECIFICATIONS AT 25°C - OPERATING TEMPERTURE RANGE -40°C TO +85°C

PART NUMBER	TURNS RATIO (Pri:Sec ± 5%)	PRIMARY OCL (µH Min.)	PRIMARY L_L (µH Max.)	PRI-SEC Cw/w (pf Max.)	PRIMARY DCR (Ohms Max.)	SECONDARY DCR (Ohms Max.)	Schematic	Primary Pins
PM-DA10	1 : 1.24	45.0	2.0	30	0.180	0.250	A	1-4
PM-DA12	1 : 2.00	45.0	2.0	30	0.180	0.280	A	1-4
PM-DA14	1 : 2.26	45.0	2.0	30	0.180	0.300	A	1-4

MECHANICAL | **SCHEMATICS**

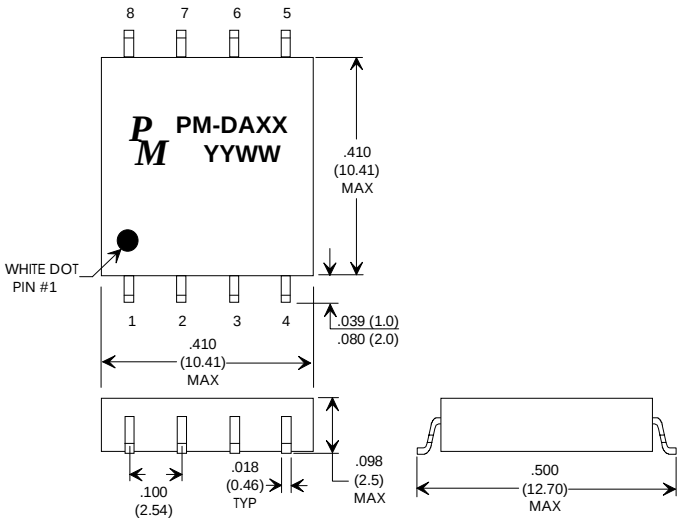

RECOMMENDED P.C.B. LAYOUT
Dimensions in inches (mm)

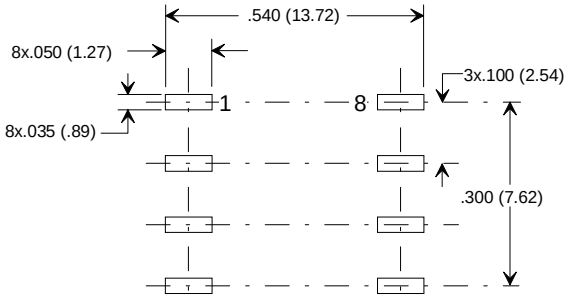

A

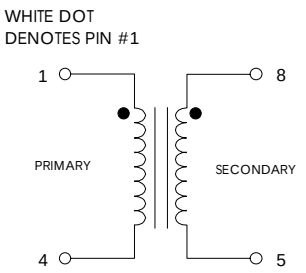

PRELIMINARY

Specifications subject to change without notice.

pm-daxx 2/00

20381 BARENTS SEA CIRCLE, LAKE FOREST, CA 92630 • TEL: (949) 452-0511 • FAX: (949) 452-0512 • http://www.premiermag.com